AW5601 Series

Industrial Wireless Access Point



FEATURE HIGHLIGHTS

- Long-Range Transmission: 150m @ 30Mbps, 3km @ 70Mbps directional antenna
- Industrial Communication mode combines advanced features (Flash Roaming, PROFINET Transparent, and VLAN tag)
- Flash Roaming (< 25ms @ 2.4GHz / < 5ms @ 5GHz)(IC mode only)
- Standard Wi-Fi Roaming (802.11r) with <100ms roaming time
- Versatile operating modes for tailored connectivity (WDS bridge and AP / Client)
- PROFINET Transparent mode for addressing NAT & PROFINET deployment
- Engineered for extreme condition (-30°C to 70°C) with advanced EMC design
- Streamline device management with NIMBL centralized software
- Security compliance with EN18031 under RED Directive

PRODUCT DESCRIPTION

Wide application

AW5601 is a rugged, industrial-grade wireless access point suited for harsh conditions. Utilizing the 5GHz frequency band, AW5601 causes minimal interference with existing wireless devices, allowing easy upscaling of systems. Besides basic AP/Client modes, an additional WDS Bridge mode allows distribution from a WDS Root to multiple WDS Hybrids and wireless devices. WDS Root and Hybrids have the same wireless MAC address, SSID, and wireless channel settings, forming a larger, more flexible wireless network than simple APs.

High efficiency

Developed specifically with industrial automation in mind, the AW5601 features Flash Roaming and PROFINET transparency, empowering AGV/AMR applications with less latency, simpler topologies, and higher efficiency, which can be further enhanced with PoE PD support.

Simply secure

Security is also vital in AW5601's design. State-of-the-art encryption complements the ability to create a virtual network among wireless clients, enabling easy and intuitive communication control between clients while imposing restrictions on data and excluding malware. And finally, AW5601 embodies a robust wireless network manager to help your network deliver optimal performance.

+ 886-3-5508137
+ 886-3-5508131
info@atop.com.tw
www.atoponline.com

APPLICATION CASES

AP mode and Client mode

LAN

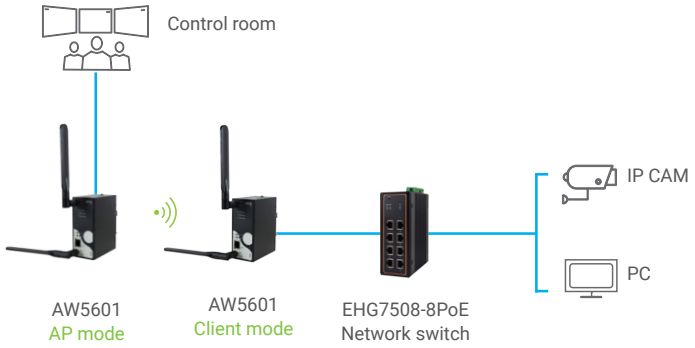

WDS mode

LAN

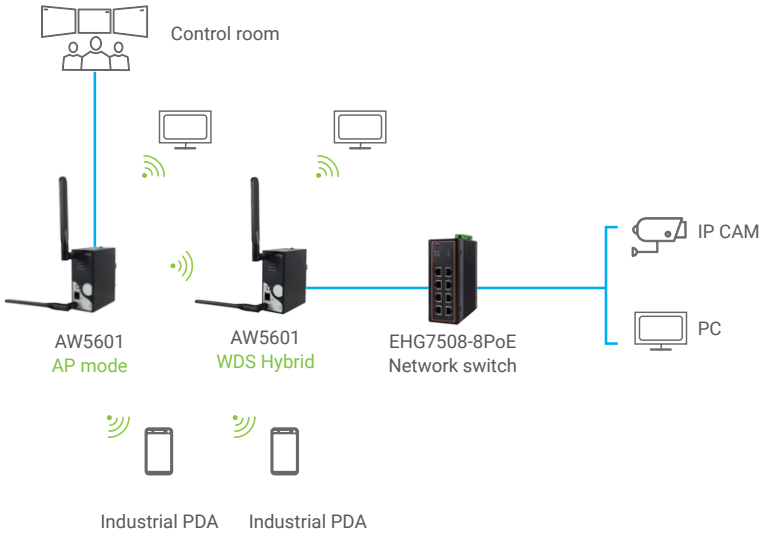

Long distance connection Application under 5GHz (or with directional antenna)

LAN

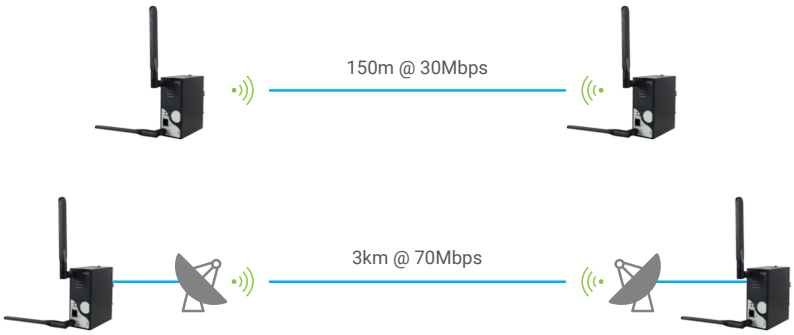

Industrial Communication Mode

The AW5601-IC model includes a built-in Industrial Communication Mode, which combines advanced features such as Flash Roaming, PROFINET Transparent, and VLAN Tagging. Under this mode, packet transmission over wireless also differs from regular transmission. See the below diagram for details.

Industrial Communication Mode

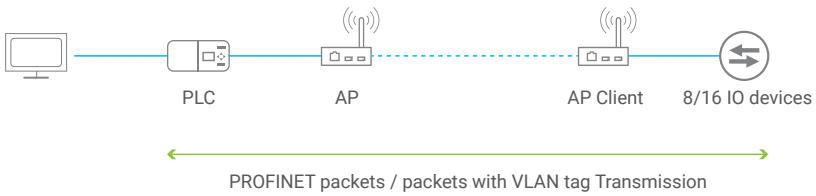

Features on Industrial Communication Mode:

1. Flash Roaming
2. PROFINET Transparent and over-NAT Application
3. VLAN tag
4. PROFINET QoS
5. Other Industrial Protocols (by request)

Regular (Non-IC) Mode

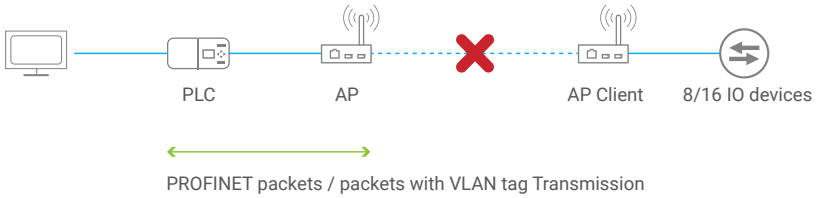

Application on AGV with Flash Roaming and PROFINET Transparent

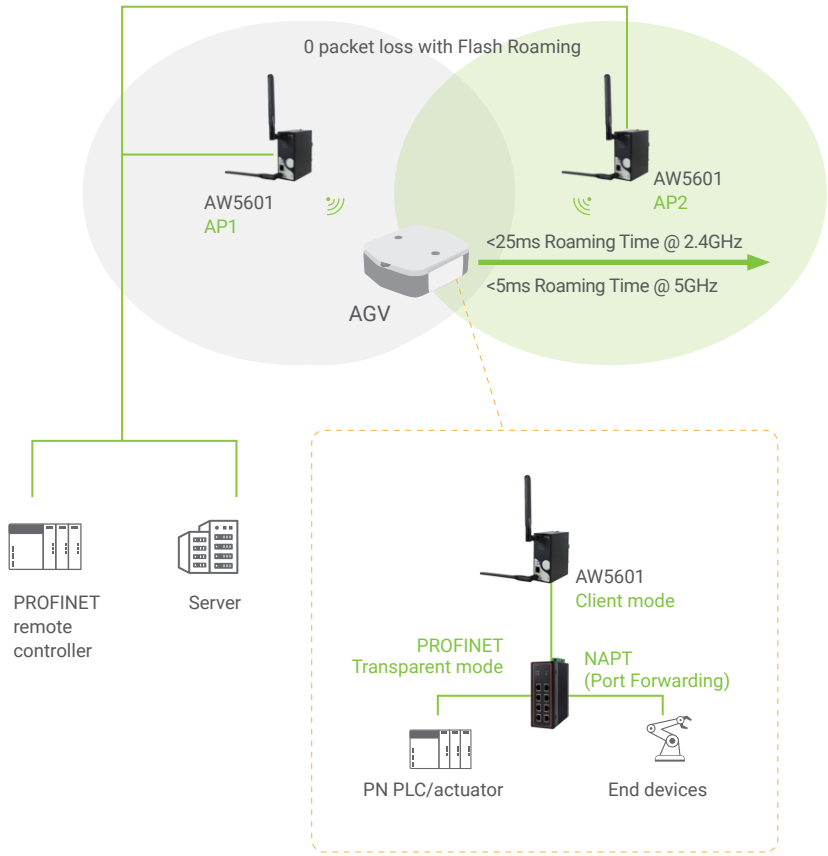

AGVs and other mobile systems can move beyond the range of a single AP. Yet, for processes that operate in transit, the latency due to network handover can be crucial. AW5601 offers Flash Roaming that achieves handover with less than 30ms signal switching latency, causing minimal impact on operation.

An AGV is a small system incorporating several controlled devices and a CPU or PLC for management. Considering the number of total devices in a site, AGV networks are usually set as small LANs, with end-device traffic undergoing network address translation (NAT/NAPT (Port Forwarding)) to conserve the number of globally valid IPs.

Many PLCs, however, work with PROFINET packets under a NAT/NAPT (Port Forwarding) environment, which will be lost through address translation. Therefore, AW5601 supports a PROFINET Transparent mode to allow explicitly permitted PROFINET communications to pass through under a NAT/ NAPT (Port Forwarding) environment, achieving both efficiency and effectivity in AGV systems.

* The data is the result of tests conducted in a standard lab.

DIMEMSIONS & LAYOUT

Front View

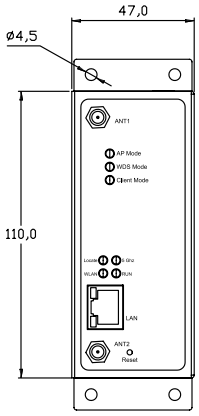

Back View

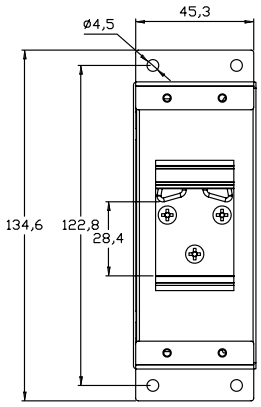

Left Side View

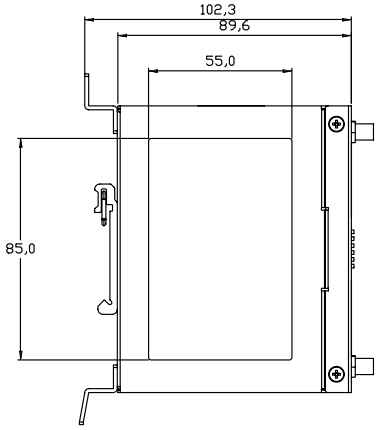

Right Side View

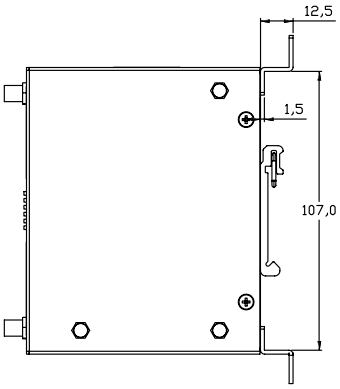

Top and bottom view

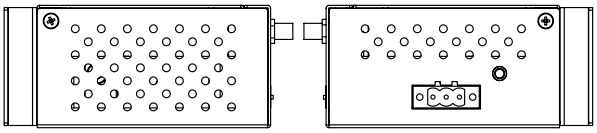

SPECIFICATIONS

Technical Specifications	
Model Name	AW5601
Connectivity	
Wi-Fi Parameter	802.11a (5GHz), 802.11g (2.4GHz) 802.11n (2.4GHz/5GHz), 802.11ac (5GHz)
Ethernet Port	1x 10/100/1000Mbps (802.3at PoE PD; optional)
Software Characteristics	
Watchdog	Yes
Operation Modes	AP, Client, WDS, WDS Hybrid (Repeater), Industrial Communication
Wireless Security	WPA/WPA2/WPA3 PSK/Enterprise
Network Security	Client isolation, firewall/filtering
Alert Events	E-mail, SNMP Trap
Support Protocol	IPv4, TCP, UDP, ICMP,ARP, DHCP Server/Client, DNS, SMTP, SNMP vl/v2/v3, NTP, SNTP, SMTP/Syslog, HTTP/HTTPs, TFTP, NAT/NAPT (Port Forwarding)/Static NAT, STP/RSTP (forwarding)
Configuration	ATOP Management Utility, Web UI
Diagnostic Functions	System status
Others	Flash roaming, PROFINET transparent under Industrial Communication mode (IC mode)
Wireless Characteristic	
Tx / Rx	2T2R MIMO
Standard Conformance	802.11a/g/n/ac
Antenna (5GHz)	2x RP-SMA(M) connectors, 5dBi
Data Rate	
802.11a/g	54Mbps
802.11n	300Mbps
802.11ac	867Mbps
Antenna	
Gain	2.4GHz(3dBi), 5G(5dBi)
Connector	2x RP-SMA(M) connectors

For CE

Transmission Rate

Frequency Band	Standard	Channel	Frequency (MHz)
WLAN 2.4 GHz	802.11g (20 MHz)	1–13	2412–2472 MHz
	802.11n (20 MHz)	1–13	2412–2472 MHz
	802.11n (40 MHz)	3–11	2422–2462 MHz
WLAN 5 GHz (Band 1)	802.11a	36	5180 MHz
	802.11n (20 MHz)	36	5180 MHz
	802.11n (40 MHz)	38	5190 MHz
	802.11ac (80 MHz)	42	5210 MHz

Transmitter Power

Frequency Band	Standard	Power Detail (dBm)
WLAN 2.4 GHz	802.11g	18.42 dBm
	802.11n (20 MHz)	18.72 dBm
	802.11n (40 MHz)	18.36 dBm
WLAN 5 GHz (Band 1)	802.11a	14.84 dBm
	802.11n (20 MHz)	11.92 dBm
	802.11n (40 MHz)	10.23 dBm
	802.11ac (80 MHz)	15.98 dBm

For FCC

Transmission Rate

Frequency Band	Band	Channel	Frequency (MHz)
WLAN 2.4 GHz	802.11g (20 MHz)	1–11	2412–2472 MHz
	802.11n (20 MHz)	1–11	2412–2472 MHz
	802.11n (40 MHz)	3–9	2422–2462 MHz
WLAN 5 GHz (Band 1)	802.11a	36/44/48	5180/5220/5240 MHz
	802.11n (20 MHz)	36/44/48	5180/5220/5240 MHz
	802.11n (40 MHz)	38/46	5190/5230 MHz
	802.11ac (80 MHz)	42	5210 MHz
WLAN 5 GHz (Band 4)	802.11a	149/157/165	5745/5785/5825 MHz
	802.11n (20 MHz)	149/157/165	5745/5785/5825 MHz
	802.11n (40 MHz)	151/159	5755/5795 MHz
	802.11ac (80 MHz)	155	5775 MHz

Transmitter Power			
Frequency Band	**Standard**	**Channel**	**Power Detail (dBm)**
WLAN 2.4 GHz	802.11g	1/6/11	14.11/13.93/13.65 dBm
	802.11n (20 MHz)	1/6/11	19.61/19.12/18.72 dBm
	802.11n (40 MHz)	1/4/7	19.15/18.76/18.54 dBm
WLAN 5GHz (Band 1)	802.11a	36/44/48	8.63/8.23/11.24 dBm
	802.11n (20 MHz)	36/44/48	10.42/12.95/15.5 dBm
	802.11n (40 MHz)	38/46	10.12/15.23 dBm
	802.11ac (80 MHz)	42	15.76 dBm
WLAN 5GHz (Band 4)	802.11a	149/157/165	13.74/15.74/15.56 dBm
	802.11n (20 MHz)	149/157/165	19.38/20.58/20.46 dBm
	802.11n (40 MHz)	151/159	18.98/19.53 dBm
	802.11n (80 MHz)	155	19.11 dBm

Power Characteristics	
Input Voltage	12-48 VDC
Input Current (12VDC)	0.56 A @ 12 VDC
Power Consumption	Approximately 6.72W (Max)
Reverse Polarity Protection	Yes
Connection	3-pin Lockable Terminal Block
Mechanicals	
Dimensions	47x110x90 mm
Installation	DIN-Rail, wall mount (optional kit)
Reset Button	Yes
Ingress Protection Rating	IP30 Protection
Environmental Limits	
Operating Temperature	-30°C to +70°C
Storage Temperature	-40°C to +85°C
Ambient Relative Humidity	5% to 95%, 55°C (Non-condensing)

REGULATORY APPROVALS

Regulatory Approvals				
EMC	EN55032: 2015/A11:2020, EN61000-6-4:2007+A1:2011 (Level) EN55035:2017/A11:2020, EN61000-6-2:2005+AC:2005 (Level) CNS15936			
Radio	FCC 15 15.247, FCC 15E 15.407, EN 301893, EN 300328, NCC LP0002			
EMF	EN 62311: 2008			
Test	**Description**		**Test Levels**	**Levels**
EN61000-4-2	ESD	Contact Discharge Air Discharge	±4KV ±8KV	3 3
EN61000-4-3	RS	Radiated (Enclosure)	10 (V/m), 80-1000 MHz 3 (V/m), 1.4-6.0 GHz	3
EN61000-4-4	EFT	DC Power Port Signal Port	±1.0KV@ 5.0kHz ±1.0KV@ 5.0kHz	3 3
EN61000-4-5	Surge	DC Power Port DC Power Port Signal Port	Line-to-Line±0.5 KV Line-to-Earth±1.0 KV Line-to-Earth±1.0 KV	3 3 3
EN61000-4-6	CS	DC Power Port Signal Port	10 V, 150 kHz-80 MHz, 80% AM 10 V, 150 kHz-80 MHz, 80% AM	3
EN61000-4-8	PFMF	(Enclosure)	30A/m (r.m.s), 50Hz or 60Hz	4
Safety	IEC/EN 62368-1, CNS15598-1			
Shock	IEC 60068-2-27			
Freefall	IEC 60068-2-32			
Vibration	IEC 60068-2-6			
Warranty	5 years			
RoHS	Yes			
Security	EN18031			

ORDERING INFORMATION

Ordering information

Model Name	Part number	PoE PD support	PROFINET Transparent (PROFINET packet forwarding under NAT environment)	PROFINET packet forwarding (under non-NAT environment)	VLAN forwarding	Flash Roaming	General Roaming
AW5601	1P1AW560100001G	-	-	-	-	-	●
AW5601-P	1P1AW560100002G	●	-	-	-	-	●
AW5601-IC	1P1AW560100003G	-	●	●	●	●	●
AW5601-P-IC	1P1AW560100004G	●	●	●	●	●	●

Optional Accessories

Model name	Part number	Description
UN315-1212 (US-Y)	505001511200003G	Y-Type power adapter, 100~240VAC input, 1.25A @ 12VDC output, US plug, LV6
UNE315-1212 (EU-Y)	505001511200013G	Y-Type power adapter, 100~240VAC input, 1.25A @ 12VDC output, EU plug, LV6
UN315-2465 (US)	505001612400002G	Y-Type power adapter, 100~240VAC input, 0.65A @ 24VDC output, US plug, LV6
UNE315-2465 (EU)	505001612400012G	Y-Type power adapter, 100~240VAC input, 0.65A @ 24VDC output, EU plug, LV6
WMK-454-Black	701000000000043G	Black Aluminum Wall Mount Kit